2403-MDSK

Pitch *1.25mm* Wire to Board (Lock) Connectors - SMT Type

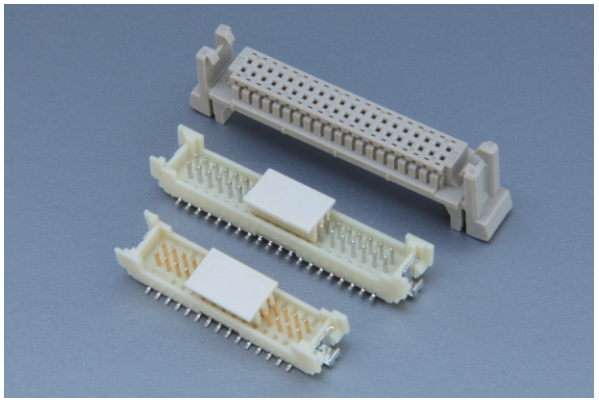

PERFORMANCE

Electrical Rating: AC/DC 150V 1A
額定電壓電流

Insulation Resistance: 500MΩ min.
絕緣阻抗

Withstanding Voltage: 500V AC/minute
耐電壓

Temperature Range: -25℃~+85℃
適用溫度

RoHS Compliant

1.25mm

CONNECTOR - Top Entry

Part No.: **MDSK2403P15~MDSK2403P20**
產品編號

Material: Housing: Nylon 94V-0
材質 塑膠座

Contact Pin: Brass, Tin-plated
接觸針 黃銅, 鍍錫

Reinforcement: PB
補強片 磷青銅

Suitable Contact: 2403PS-2 RF:B
配合端子

Suitable Housing: PDK2403P15~PDK2403P20
配合塑膠

Applicable Wire: AWG# 26~30
適用電線

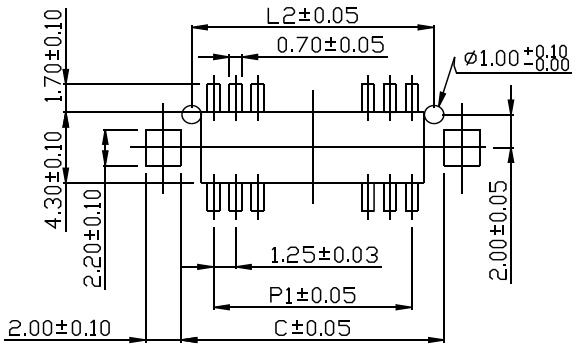

P.C.B LAYOUT

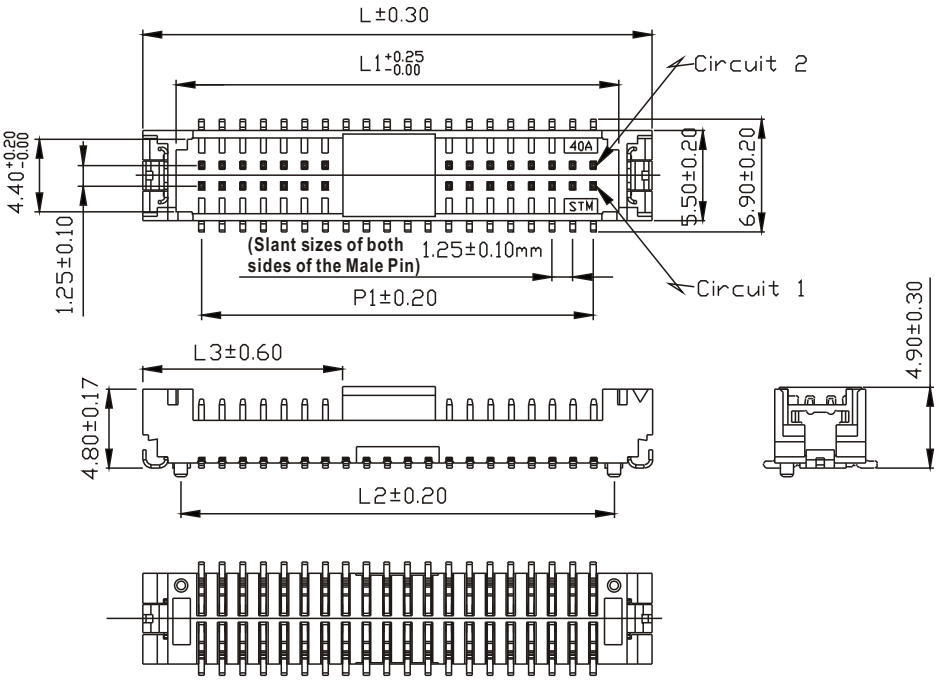

Unit: mm

Part No.	POS.	L	L1	L2	L3	P1	C	Reel
MDSK2403P15	2X15	24.60	20.70	20.00	8.35	17.50	21.20	1000
MDSK2403P20	2X20	30.85	26.95	26.25	11.45	23.75	27.45	1000

Note: Embossed tape package provides with suction area.

Behave in conformity with continualproduct development policy, SinSheng (STM) reserves the rightof specification changing of contentsdescribed in this catalogue atany time and without priornotice. Please contact the salesdepartment nearby for most updatedinformation.
由於產品持續開發的政策, 信盛(STM)保留隨時變更本目錄所述之規格且不需提前通知的權利. 請連繫業務處查詢最新的產品資訊.

Embossed Carrier Tape Dimensional Drawing

MDSK2403 Series

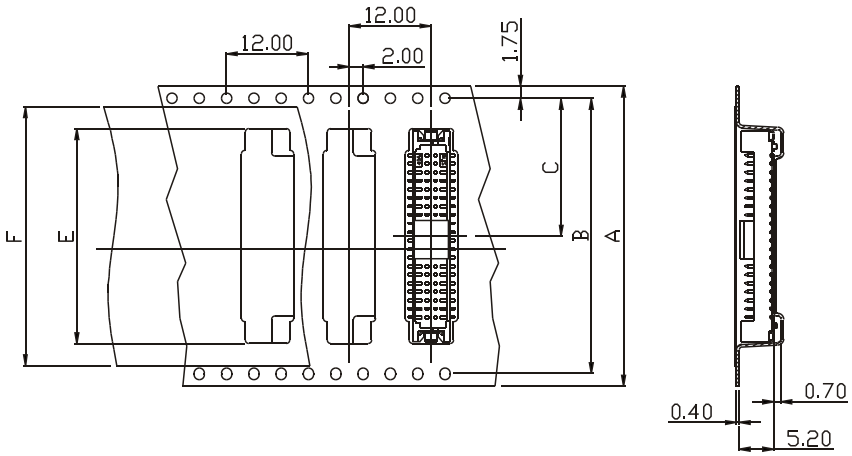

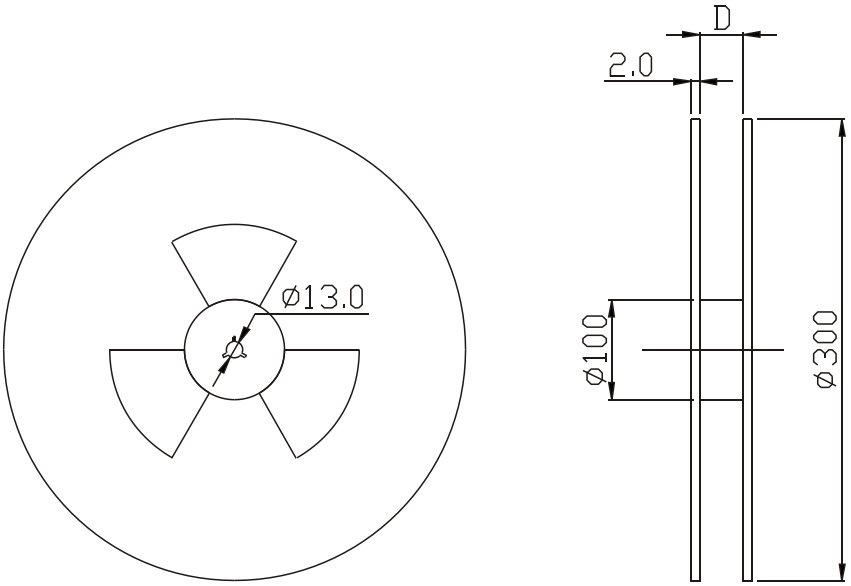

Unit: mm

POS.	A	B	C	D	E	F
2X15	44	40.40	20.20	44.40	24.70	37.00
2X20	44	40.40	20.20	44.40	30.95	37.00

HOUSING - Lock Type

Part No.:**PDK2403P15~PDK2403P20**
產品編號
Material: Nylon 94V-0
材質
Suitable Contact: 2403PS-2 RF:B
配合端子
24031PS-2
24031PS-2 RF:A

Suitable Connector: MDSK2403P15~MDSK2403P20
配合公座
Applicable Wire: 2403PS-2 RF:B AWG#26~30
適用電線
24031PS-2 & 24031PS-2 RF:A AWG#28~30

PERFORMANCE

Electrical Rating: AC/DC 150V 1A
額定電壓電流
Insulation Resistance: 500MΩ min.
絕緣阻抗
Withstanding Voltage: 500V AC/minute
耐電壓
Temperature Range: -25℃~+85℃
適用溫度

RoHS Compliant

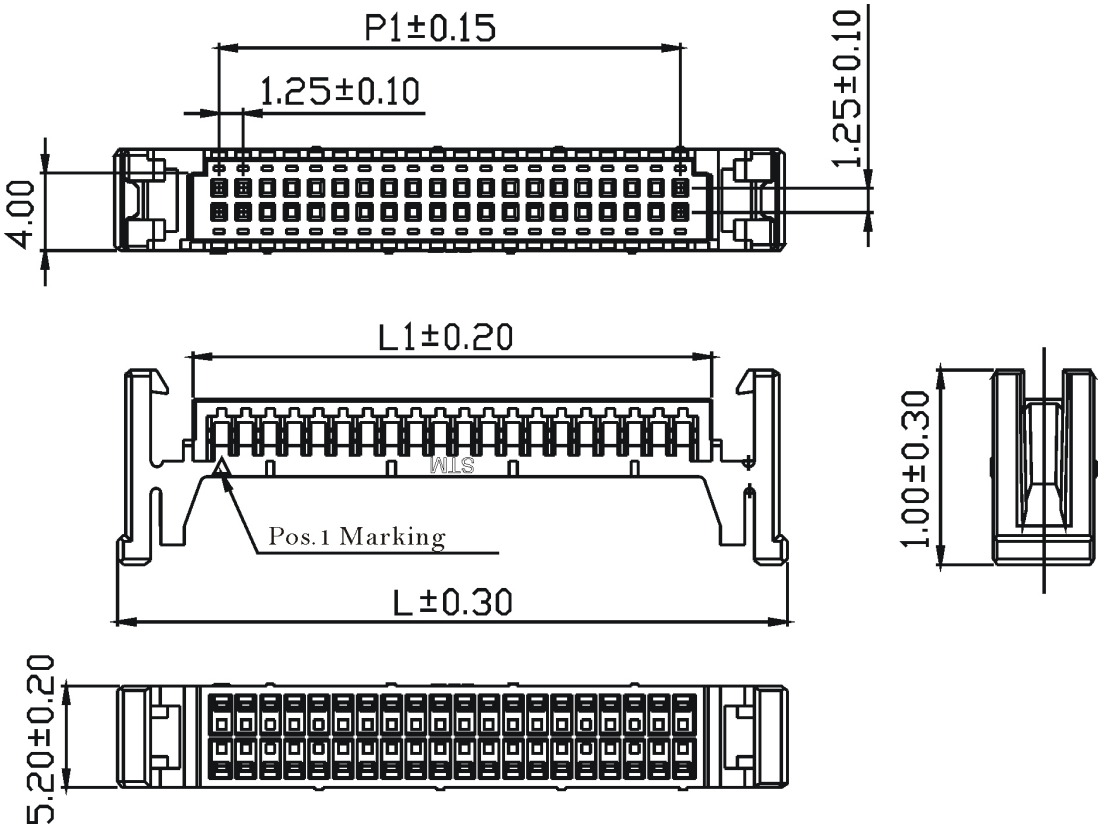

Unit: mm

Part No.	POS.	L	L1	P1	Pack.
PDK2403P15	2X15	28.20	20.45	17.50	1000
PDK2403P20	2X20	34.45	26.70	23.75	1000

1.25mm

TERMINAL

Part No.:**2403PS-2 RF:B**
產品編號
Thickness: 0.15mm
銅板厚度
Material: Phosphor Bronze
材質 磷青銅
Surface Treatment: Tin-plated
表面處理 鍍錫
Applicable Wire: AWG# 26~30
適用電線
Insulation O.D.: 0.65~1.00mm
線皮外徑
Suitable Housing: PDK2403P15~PDK2403P20
配合塑膠
Suitable Connector: MDSK2403P15~MDSK2403P20
配合公座
Packing: 15,000PCS(Reel)
包裝數量

PERFORMANCE

Electrical Rating: AC/DC 150V 1A
額定電壓電流
Insulation Resistance: 500MΩ min.
絕緣阻抗
Withstanding Voltage: 500V AC/minute
耐電壓
Temperature Range: -25℃~+85℃
適用溫度

REACH
RoHS Compliant

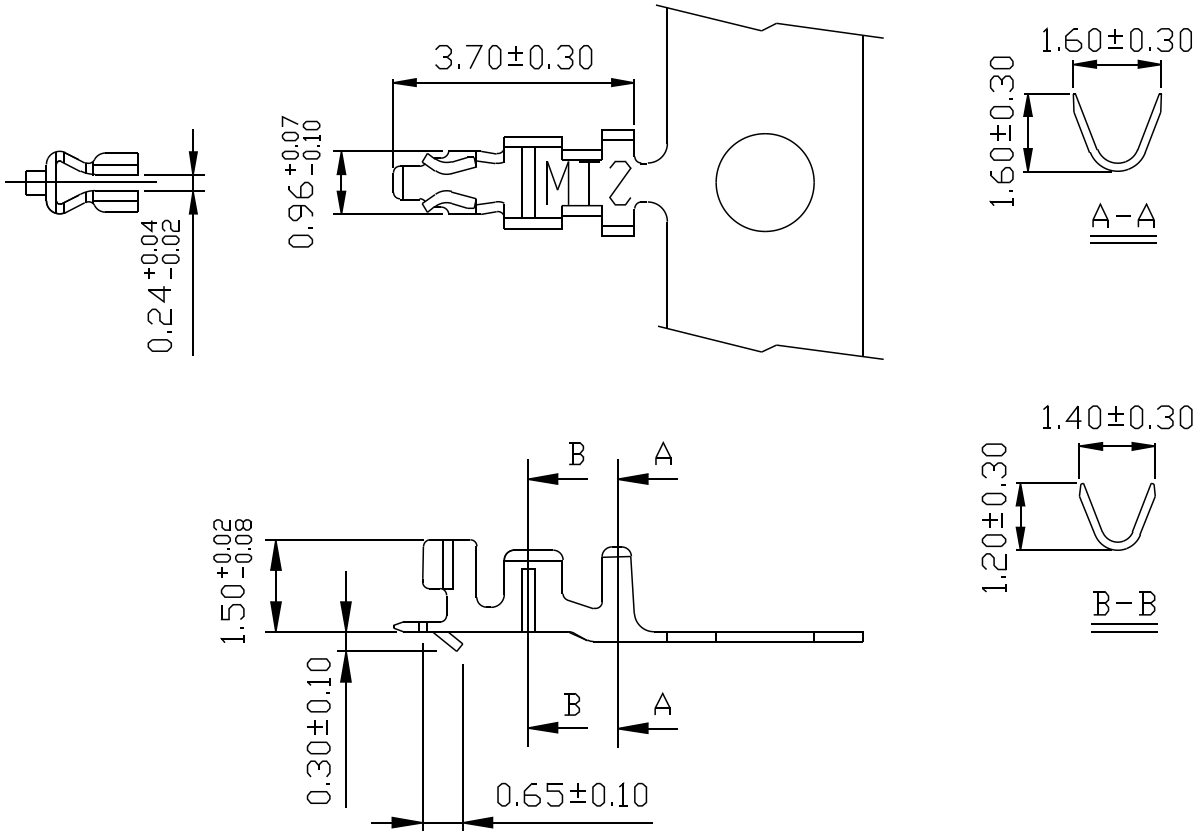

TERMINAL

Part No.:**24031PS-2**
產品編號
Thickness: 0.15mm
銅板厚度
Material: Phosphor Bronze
材質 磷青銅
Surface Treatment: Tin-plated
表面處理 鍍錫
Applicable Wire: AWG# 28~30
適用電線
Insulation O.D.: 0.70~1.00mm
線皮外徑
Suitable Housing: PDK2403P15~PDK2403P20
配合塑膠
Suitable Connector: MDSK2403P15~MDSK2403P20
配合公座
Packing: 15,000PCS(Reel)
包裝數量

PERFORMANCE

Electrical Rating: AC/DC 150V 1A
額定電壓電流
Insulation Resistance: 500MΩ min.
絕緣阻抗
Withstanding Voltage: 500V AC/minute
耐電壓
Temperature Range: -25℃~+85℃
適用溫度

REACH
RoHS Compliant

TOLERANCE	
.0	±0.25
.00	±0.15
.000	±0.05

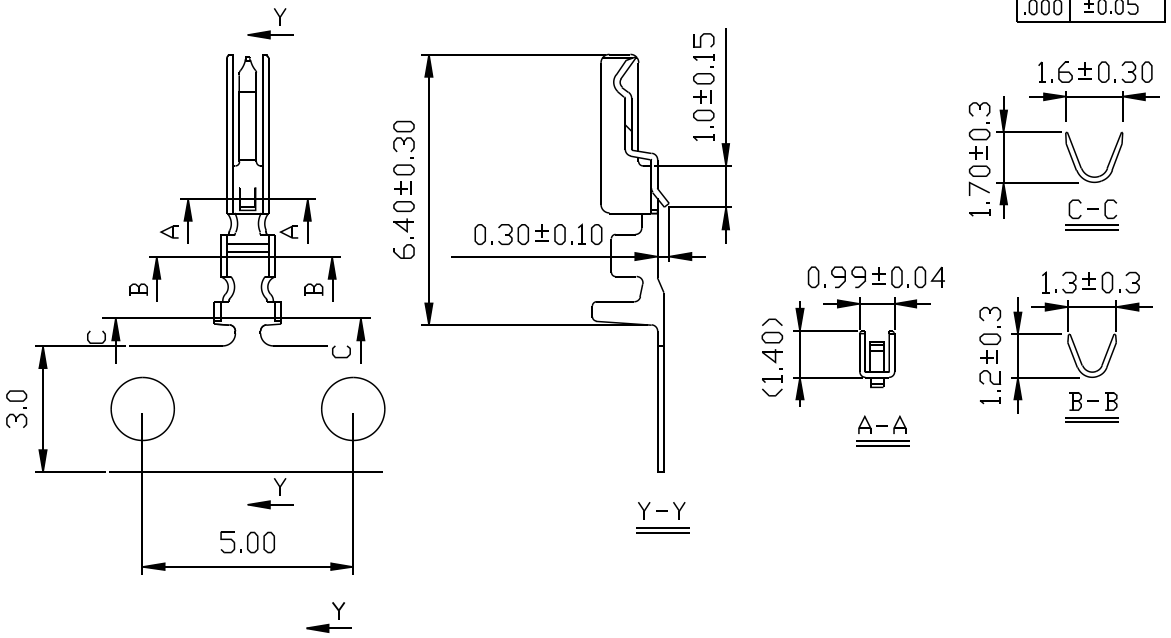

TERMINAL
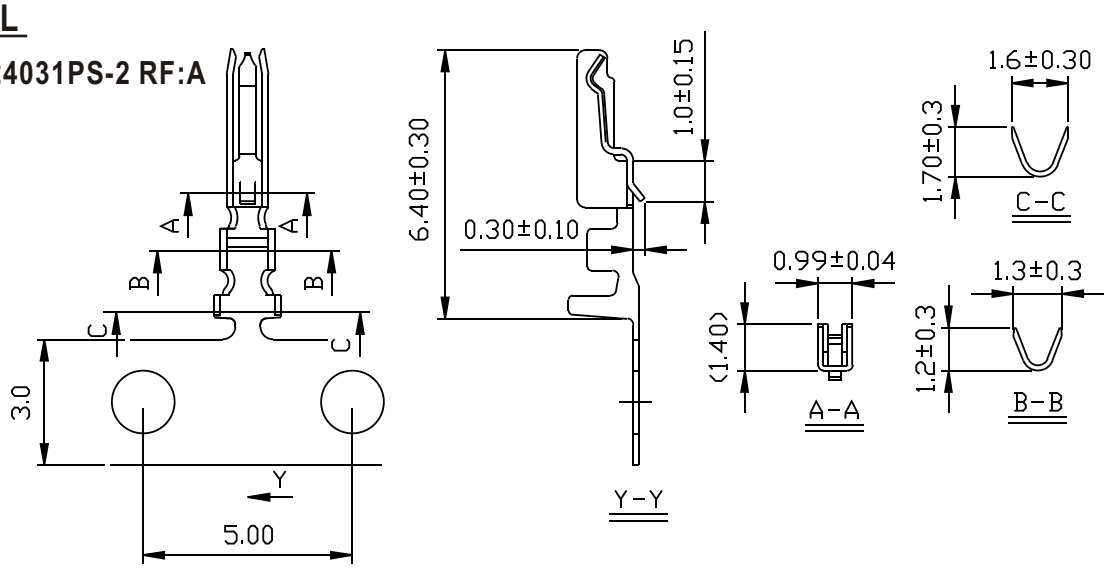
Part No.:**24031PS-2 RF:A**
產品編號